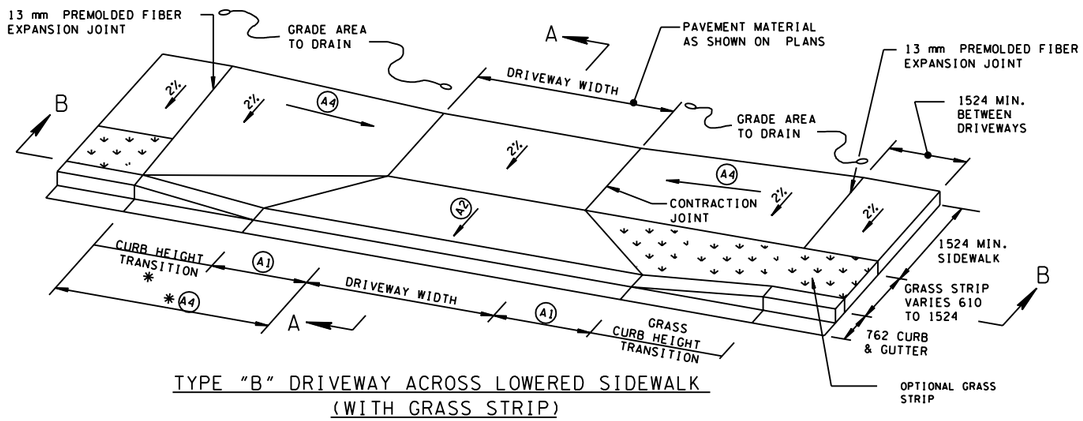

TYPE "B" DRIVEWAY ACROSS LOWERED SIDEWALK
(WITH GRASS STRIP)

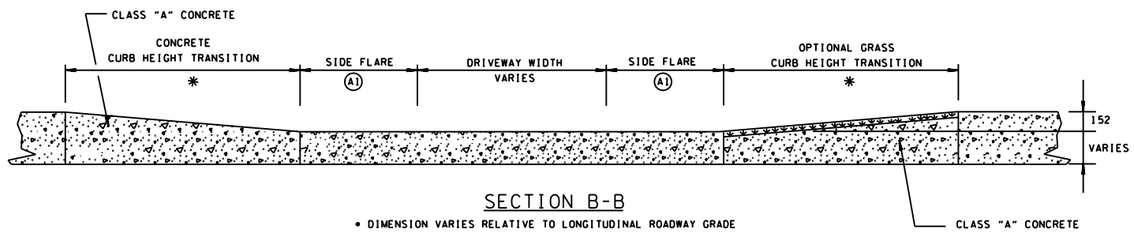

SECTION B-B

• DIMENSION VARIES RELATIVE TO LONGITUDINAL ROADWAY GRADE

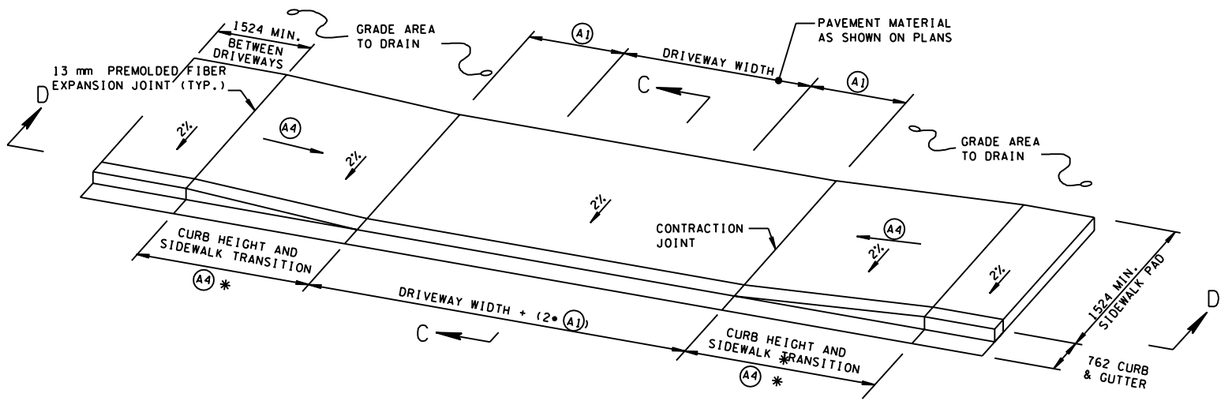

TYPE "C" DRIVEWAY ACROSS LOWERED SIDEWALK

✱ DIMENSION VARIES RELATIVE TO LONGITUDINAL ROADWAY GRADE

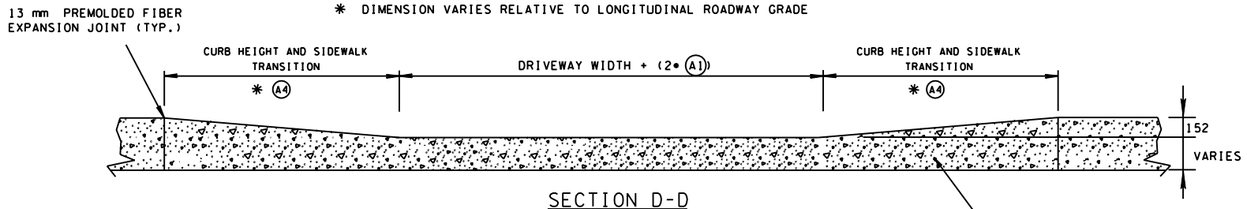

SECTION D-D

✱ DIMENSION VARIES RELATIVE TO LONGITUDINAL ROADWAY GRADE

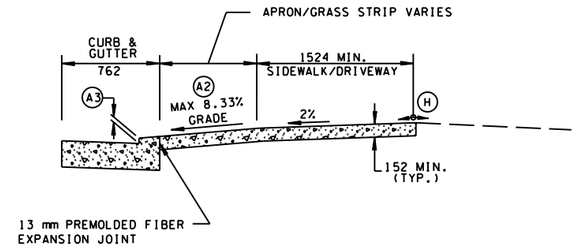

SECTION A-A

GENERAL NOTES

(A) 1.52 m MINIMUM SIDEWALK WITH A MAXIMUM CROSS SLOPE OF 2% THROUGH DRIVEWAYS.

(B) DESIGNER TO CHECK GUTTER FLOW DEPTH AT DRIVEWAY LOCATIONS TO ASSURE THAT THE DESIGN FLOW DOES NOT OVERTOP THE SIDEWALK AREA. IF OVERTOPPING OCCURS PLACE AN INLET AT THE USTREAM SIDE OF THE DRIVEWAY OR PERFORM OTHER DESIGN MITIGATION.

(C) THE CROSS SLOPE OF THE LANDING AREA SHALL NOT EXCEED 2% IN THE SIDEWALK AREA.

(D) DRIVEWAYS TO BE BUILT COMPLETE OR IN PART AS INDICATED ON THE PLANS OR AS DIRECTED BY THE ENGINEER.

(E) ALL CONCRETE DRIVEWAYS TO BE 152mm UNIFORM THICKNESS, UNLESS OTHERWISE SHOWN ON PLANS.

(F) EXPANSION JOINTS TO BE PLACED AS INDICATED ON THE PLANS EXCEPT JOINT AT BACK OF DRIVEWAY WHICH WILL BE PLACED WHEN DRIVEWAY ABUTS A RIGID DRIVEWAY OR A BUILDING.

(G) THE ROADWAY DESIGNER SHALL CONSIDER THE USE OF A CATCH BASIN ON EITHER SIDE OF THE DRIVEWAY. CAREFUL CONSIDERATION TO THE PLACEMENT OF CATCH BASINS SHALL BE TAKEN IF THE DRIVEWAY IS IN A VERTICAL SAG CURVE.

(H) ALGEBRAIC DIFFERENCE NOT TO EXCEED 10.0%.

FOOTNOTES

(A1) SIDE FLARE WIDTH SHOULD BE A MINIMUM 2.13 m FOR COMMERCIAL DRIVEWAYS. SIDE FLARE WIDTH SHOULD BE A MINIMUM 1.07 m FOR RESIDENTIAL DRIVEWAYS.

(A2) DRIVEWAY RAMP GRADE VARIES, 8.33% MAX APRON GRADE FOR RESIDENTIAL DRIVEWAYS. 6.0% MAX APRON GRADE FOR COMMERCIAL DRIVEWAYS.

(A3) HEIGHT OF LOWERED CURB SHALL BE 57 MILLIMETERS. SEE STD. DWG. RPM-NMC-10.

(A4) THE SLOPE OF THE SIDEWALK AND/OR CURB HEIGHT TRANSITION VARIES TO A MAXIMUM OF 8.33% LENGTH OF TRANSITION IS RELATIVE TO THE LONGITUDINAL ROADWAY GRADE.

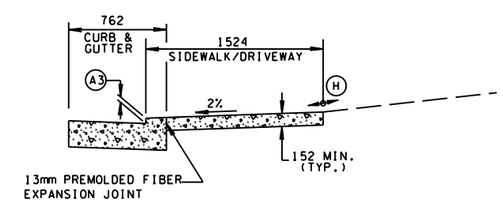

SECTION C-C

TENNESSEE METRIC D.O.T.

ALL UNITS ARE IN MILLIMETERS UNLESS NOTED OTHERWISE.

☐ MINOR REVISION -- FHWA APPROVAL NOT REQUIRED.

STATE OF TENNESSEE
DEPARTMENT OF TRANSPORTATION

DETAILS OF LOWERED STANDARD CONCRETE DRIVEWAYS

2-15-07 RPM-D-16

9/20/2007 10:41:40 AM
$$$$DGNSPEC$$$$